RadarSens | Sewer & Stormwater Level Monitoring

Intrinsically Safe ATEX Zone 0 Certified Remote Monitoring Device for Sewage/Wastewater levels.

RadarSens utilised for monitoring sewage level remotely is ATEX certified (for use in sewage networks which may contain a mixture of flammable gases and vapours) - Simple to install - Once configured with a data logger, Site information is collected and synchronised with the DataGate cloud server platform at the time of installation to allow remote monitoring from office.

The RadarSens is a radar-based monitoring sensor for remote measurement of sewer, wastewater and storm water levels. Installed in a manhole chamber, RadarSens measures the changing depth or level of sewage/wastewater. RadarSens is ATEX Zone 0 certified for use in hazardous & explosive environments which may contain inflammable gases.

RadarSens is usually integrated with a datalogger for remote data transmission of monitored sewage/wastewater levels with alarms based on rising level thresholds. The device also monitors temperature, sensor orientation (pitch & roll) & signal intensity which helps detect blockages and movement.

Multiple RadarSens devices can be set up in a sewage network for monitoring through the Datagate cloud server at central office, based on which zonal or nodal offices can be notified for maintenance & rectification activities of the sewage pipelines and manholes in a water or municipal network.

Telemetry for connectivity	Powered by a long-life battery with up to 5 years of operation

Key Features and Benefits

- **Radar technology:** Advanced and cost-effective radar sensor delivers precise data for long-term network monitoring
- **Intrinsically safe:** Certified for use in Zone 0 hazardous areas
- **Accurate:** ±0.5% accuracy with a **3m range**
- **Dependable:** IP68, Water/dust proof rugged construction no need for external power connections
- **Telemetry:** Compatible with dataloggers for NB-IoT, LTE-M and 2G cellular networks for remote data transmission
- **Bluetooth® connectivity:** Local Bluetooth® configuration allows for definitive in-chamber signal strength testing and sensor reflection tracing using the IDT app (Android and iOS)
- **Sensor health check:** Remote monitoring of sensor position (pitch & roll), data quality and chamber temperature to confirm if unexpected changes in level trends are related to third-party activity
- **Secure Installation:** A range of easy-fit stainless steel wall brackets and non-drill installation brace bars are available
- **Installation Mobile App:** Supporting quick and accurate mass deployment

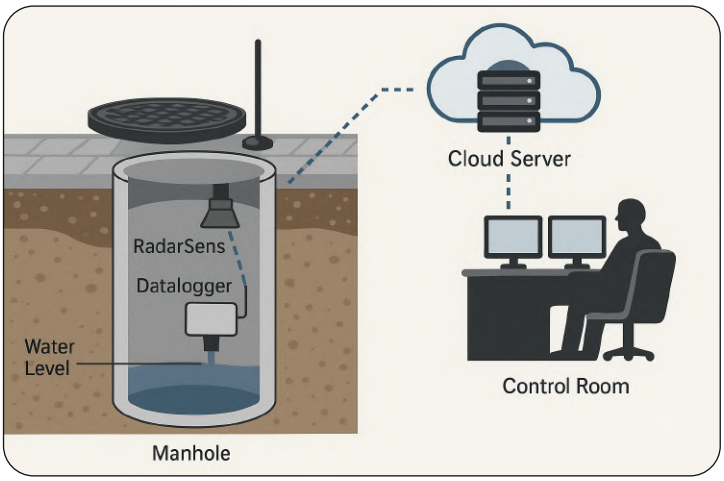

RadarSens | Sewer & Stormwater Level Monitoring

Technical Specifications:

Feature	Specification
Rating	UKEx/ATEX/IEC Ex certified to Zone 0
Range	3m
Operating Temp.	-20 to 60°C
Accuracy	±0.5%
Antenna (Logger)	Bulgin
Battery (Logger)	Typical 5+ year battery life
Alarms	Multiple threshold, profile & pitch & roll with additional diagnostics
Dimensions (HxWxD)	40x110x111mm
Deployment	Drop-in alignment tool (supplied separately)
Ingress Protection	IP68 rated

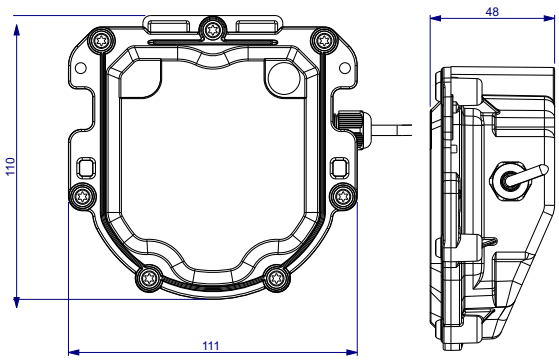

Installation Visuals:

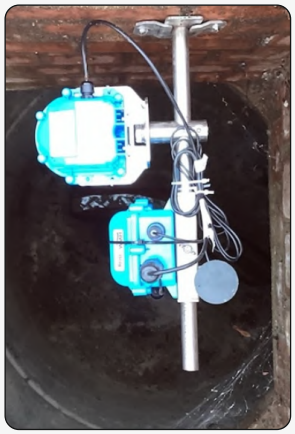

Complimentory Devices:

1 Intelligens WW

ATEX Certified Data Logger

Intelligens WW is a data logger engineered for use in waste water applications. Intrinsically safe ATEX 0 and the Intelligens WW is typically used with RadarSens for long term monitoring of sewage level & overflows, installed inside a sewer manhole.

2 HWM Deployment App

Logger Installation Support

The HWM Deployment App is an installation tool that supports the quick and effective deployment of HWM manufactured data loggers. As well as recording installation details, the Deployment App is used to test signal strength during installation.

3 DataGate/DataView

Secure Data Platforms

Our DataGate and DataView platforms provide access to the devices and the data that they gather. DataGate holds a database of all installations and site details, while DataView provides the collected level data as well as the ability to set and view alarms. The sewage network can be accordingly monitored from central office on a PC.